HPS-600-V Vacuum Switch

Herga Technology Ltd

- Vacuum switching to very high sensitivity
- Factory set or adjustable actuation setpoint
- Optional Gold contacts for optimum performance on lower voltage/current applications
- Miniature size - ideal for OEM applications
- Large choice of form factors for maximum installation flexibility
- Long life with high reliability
- UL approved

General Specifications

Actuation pressure / Setpoint tolerance	See detailed information below
Switch type	Single pole, double throw
Contact voltage	Standard 125/250 VAC / Gold contact option 125 VAC
Current rating	3A, 5A, 10A or 15A depending on switch range / Gold Contact option 0.1A (Note: Range A is 3A, B is 5A, C is 10A and D is 15A as standard)
Contact resisitance	1Ω max.
Proof pressure	See detailed information below
Material	Thermoplastic case, Urethane diaphragm
Mechanical life	10 x 10^6 cycles
Temperature range	+4°C to +65°C, Some setpoint deviation may occur throughout the temperature range. For increased temperature range of -40 to +96 °C contact us
Approval	UL508 approved. File number NKPZ8.E41523

Model Part Number	Form Factor (see drawings)	Pressure range		Setpoint tolerance	Proof Pressure
HPS-600-V RANGE - A	Form 1	5 to 20 mbar	[2" to 8" H2O]	± 20%	1.0 bar [14.7 PSI]
HPS-600-V RANGE - B		20 to 37 mbar	[8" to 15" H2O]	± 20%	1.0 bar [14.7 PSI]
HPS-600-V RANGE - C		37 to 189 mbar	[15" to 76" H2O]	± 20%	1.0 bar [14.7 PSI]
HPS-600-V RANGE - D		189 to 964 mbar	[76" to 387" H2O]	± 20%	1.0 bar [14.7 PSI]
HPS-601-V RANGE - A	Form 2	5 to 20 mbar	[2" to 8" H2O]	± 20%	1.0 bar [14.7 PSI]
HPS-601-V RANGE - B		20 to 37 mbar	[8" to 15" H2O]	± 20%	1.0 bar [14.7 PSI]
HPS-601-V RANGE - C		37 to 189 mbar	[15" to 76" H2O]	± 20%	1.0 bar [14.7 PSI]
HPS-601-V RANGE - D		189 to 964 mbar	[76" to 387" H2O]	± 20%	1.0 bar [14.7 PSI]
HPS-600-V RANGE - A - GOLD	Form 3	5 to 20 mbar	[2" to 8" H2O]	± 20%	1.0 bar [14.7 PSI]
HPS-600-V RANGE - B - GOLD		20 to 37 mbar	[8" to 15" H2O]	± 20%	1.0 bar [14.7 PSI]
HPS-600-V RANGE - C - GOLD		37 to 189 mbar	[15" to 76" H2O]	± 20%	1.0 bar [14.7 PSI]
HPS-600-V RANGE - D - GOLD		189 to 964 mbar	[76" to 387" H2O]	± 20%	1.0 bar [14.7 PSI]
HPS-601-V RANGE - A - GOLD	Form 4	5 to 20 mbar	[2" to 8" H2O]	± 20%	1.0 bar [14.7 PSI]
HPS-601-V RANGE - B - GOLD		20 to 37 mbar	[8" to 15" H2O]	± 20%	1.0 bar [14.7 PSI]
HPS-601-V RANGE - C - GOLD		37 to 189 mbar	[15" to 76" H2O]	± 20%	1.0 bar [14.7 PSI]
HPS-601-V RANGE - D - GOLD		189 to 964 mbar	[76" to 387" H2O]	± 20%	1.0 bar [14.7 PSI]

Variohm Group

Subject to change without notice

HPS-600-V Vacuum Switch

Herga Technology Ltd

Reference Dimensions (mm)

Form 1-
HPS-600 - V

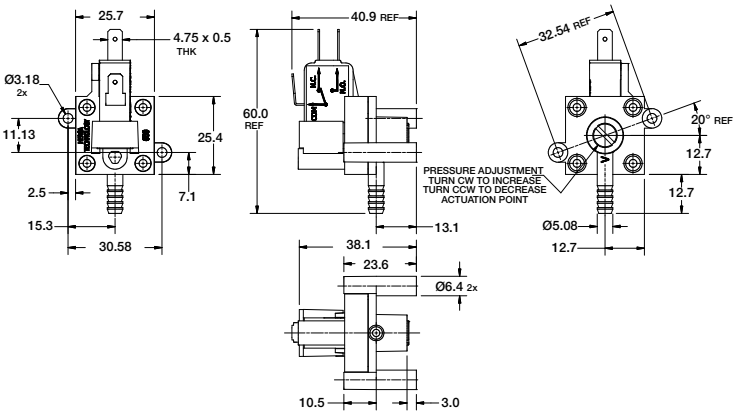

Form 2
HPS-601 - V

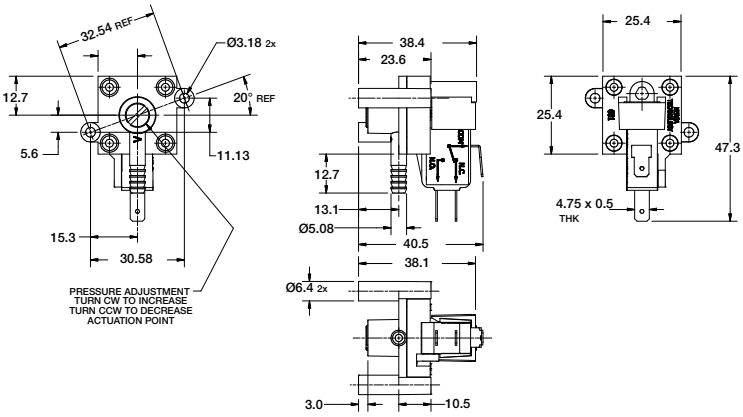

Form 3 -
HPS-600 - V - GOLD

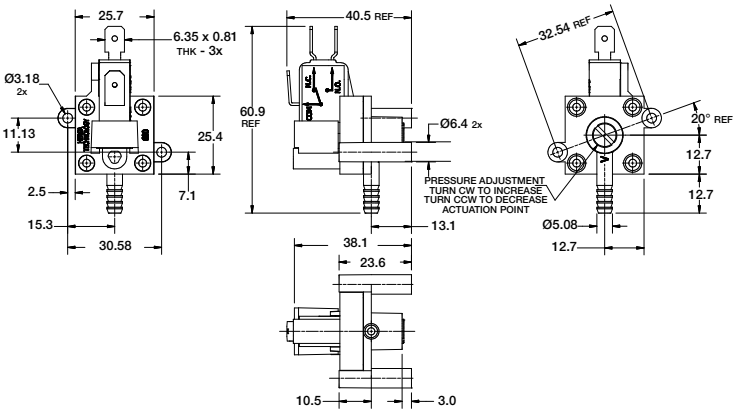
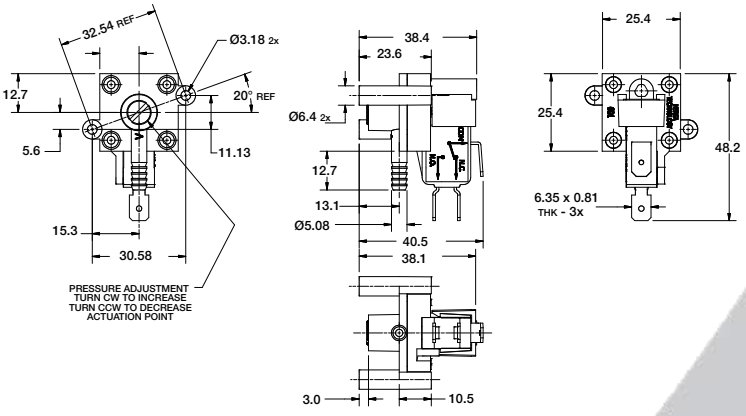
Form 4 -
HPS-601 - V - GOLD